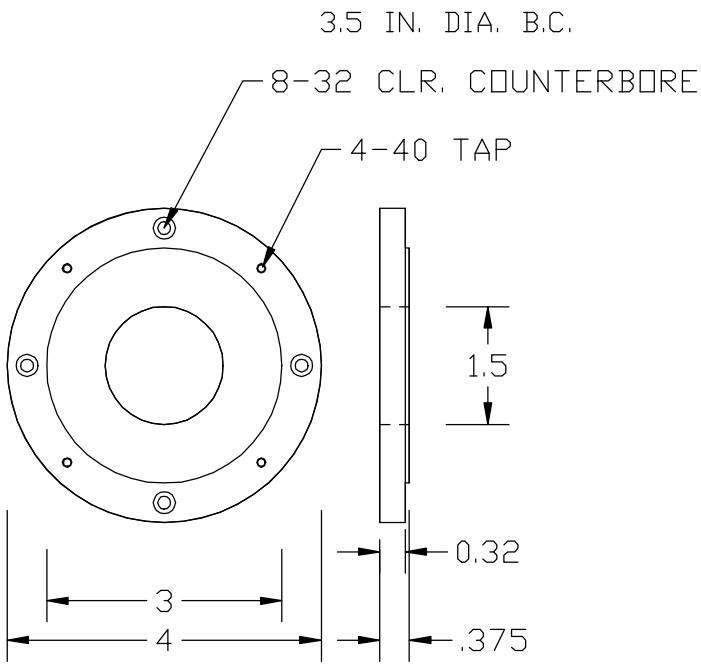

LEUSCHNER OBSERVATORY UNIVERSITY OF CALIFORNIA - BERKELEY			
KATZMAN AUTOMATED IMAGING TELESCOPE			
APOGEE ADAPTER			
DWG BY R. TREFFERS	DATE 7/7/97	SHOWN ON	SCALE : Not To Scale
DESIGN BY		DWG TYPE	DWG No KAIT035 REV