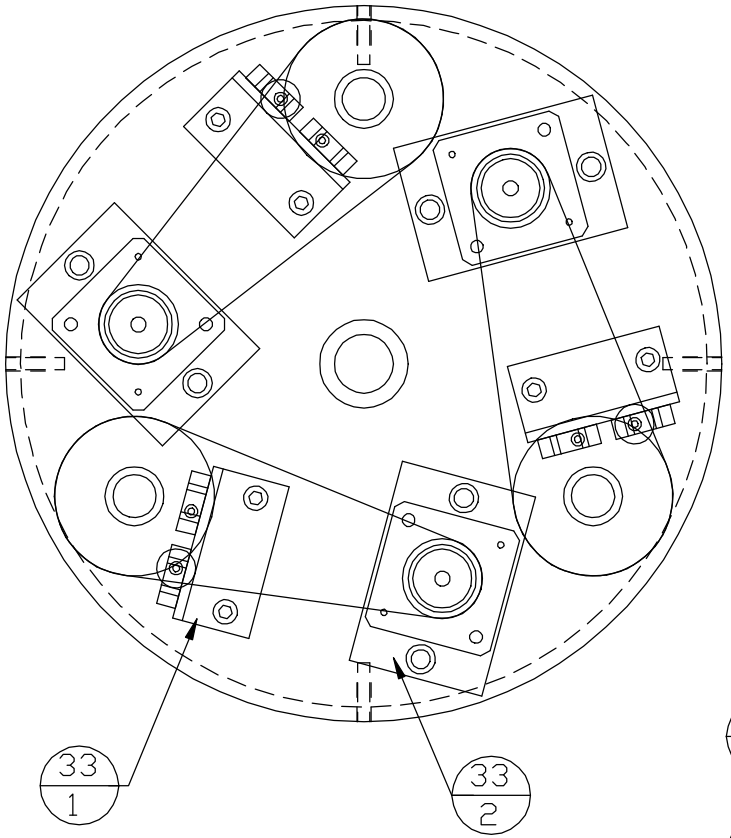

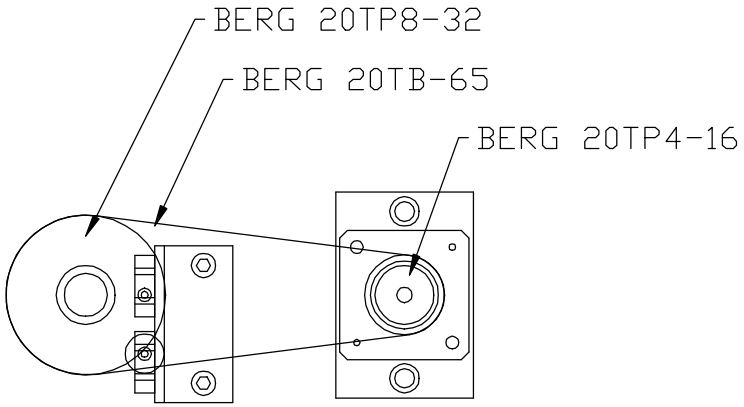

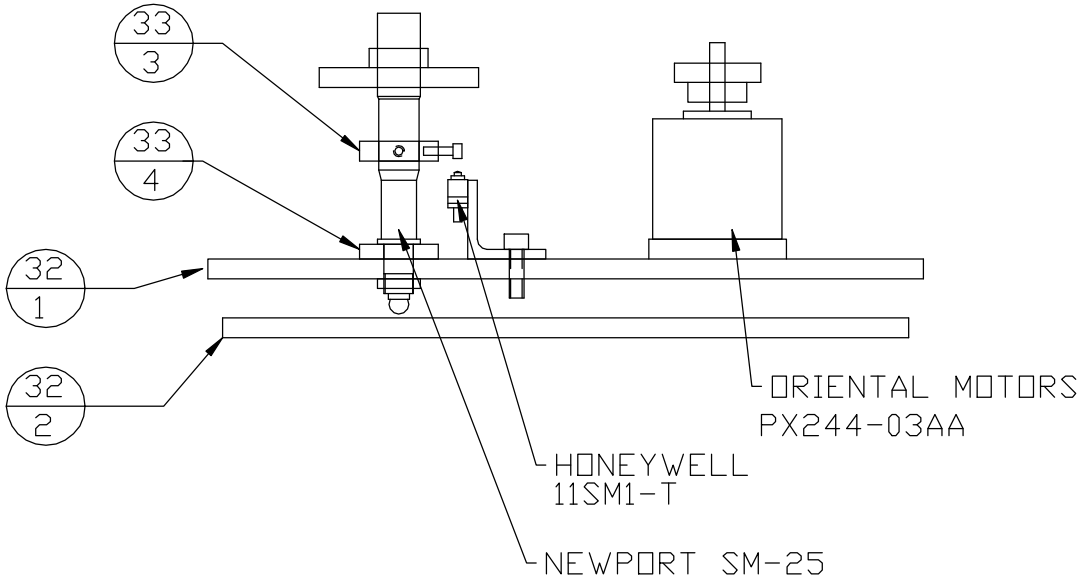

LEUSCHNER OBSERVATORY UNIVERSITY OF CALIFORNIA - BERKELEY			
KATZMAN AUTOMATED IMAGING TELESCOPE			
TELESCOPE SECONDARY			
ASSEMBLY			
DWG BY R. TREFFERS	DATE 5/12/97	SHOWN ON	SCALE : Not To Scale
DESIGN BY		DWG TYPE	DWG No KAIT031 REV