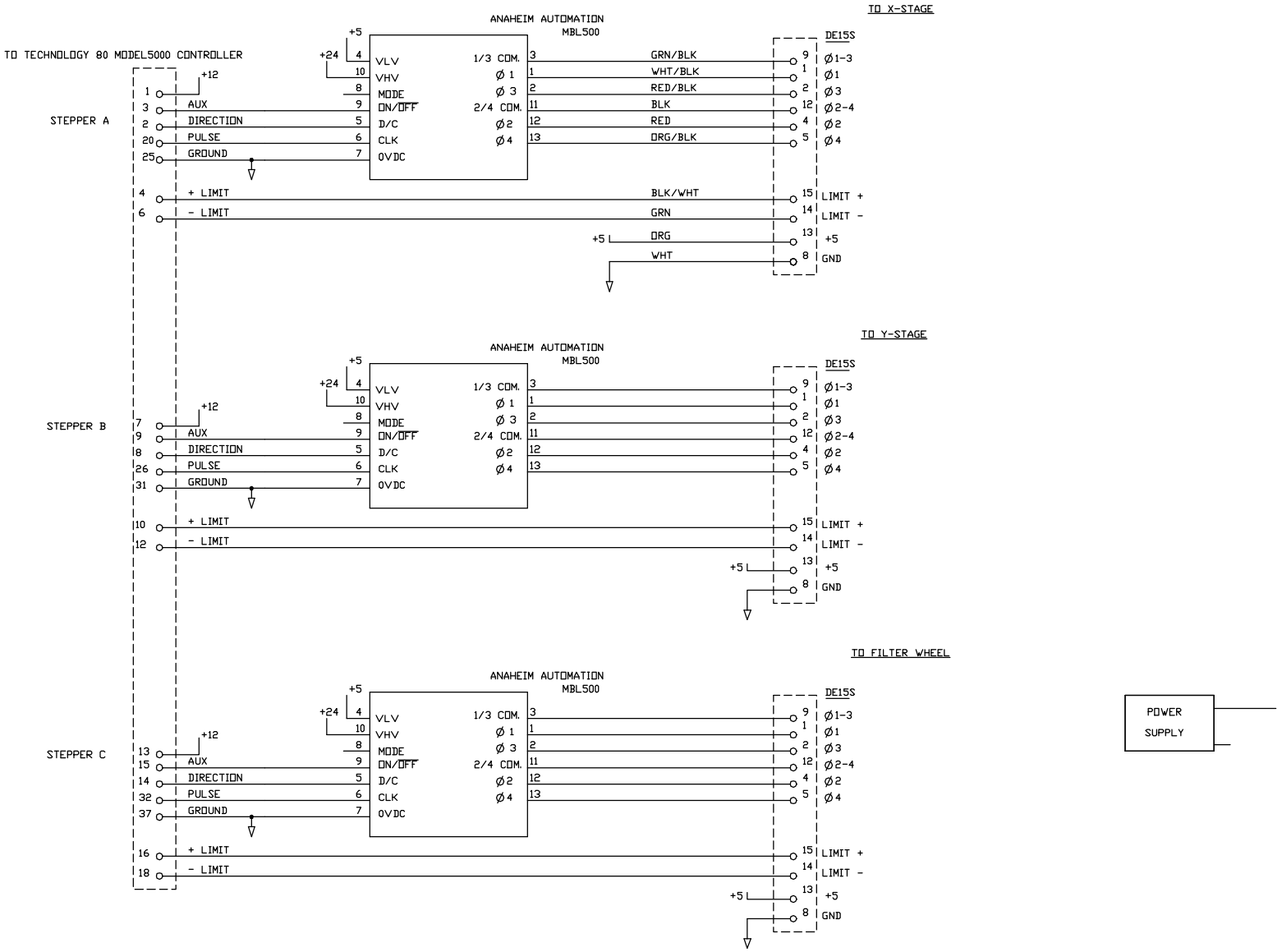

LEUSCHNER OBSERVATORY UNIVERSITY OF CALIFORNIA - BERKELEY			
KATZMAN AUTOMATED IMAGING TELESCOPE CONTROL PANEL			
DWG BY R. Treffers	DATE 9/27/95	SHEWN IN	SCALE : Not To Scale
DESIGN BY		DWG TYPE E	DWG No KAIT019 REV