35/1 PART: WINDOW RETAINER
MAT'L: AL
QTY: 1 REQ.

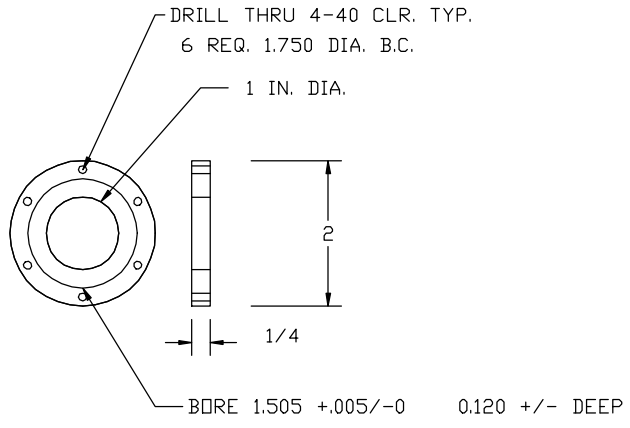

35/2 PART: CONNECTOR MOUNT
MAT'L: BRASS
QTY: 2 REQ.

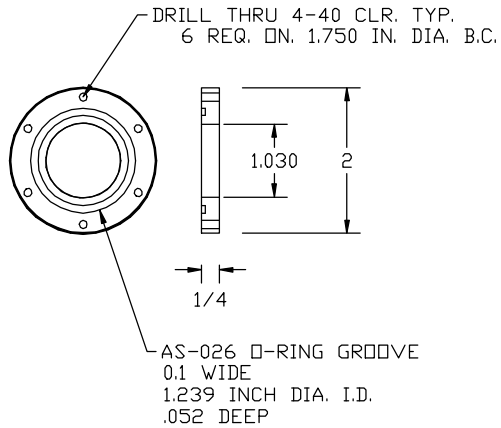

35/5 PART: CLAMP WASHER
MAT'L: 1/8 COPPER
QTY: 1 REQ.

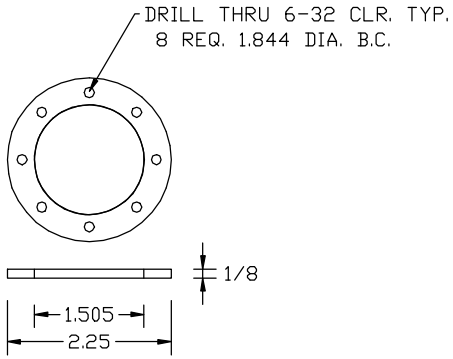

35/3 PART: FILTER WHEEL STRAP
MAT'L: 1/16 COPPER
QTY: 2 REQ.

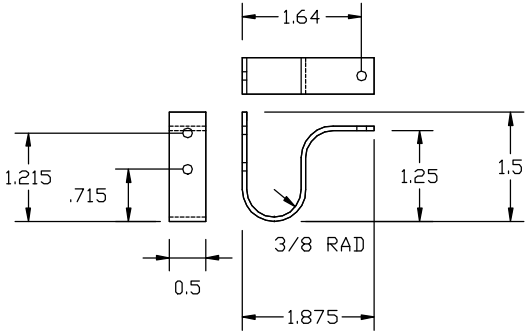

35/4 PART: CHIP STRAP
MAT'L: 1/16 COPPER
QTY: 1 REQ.

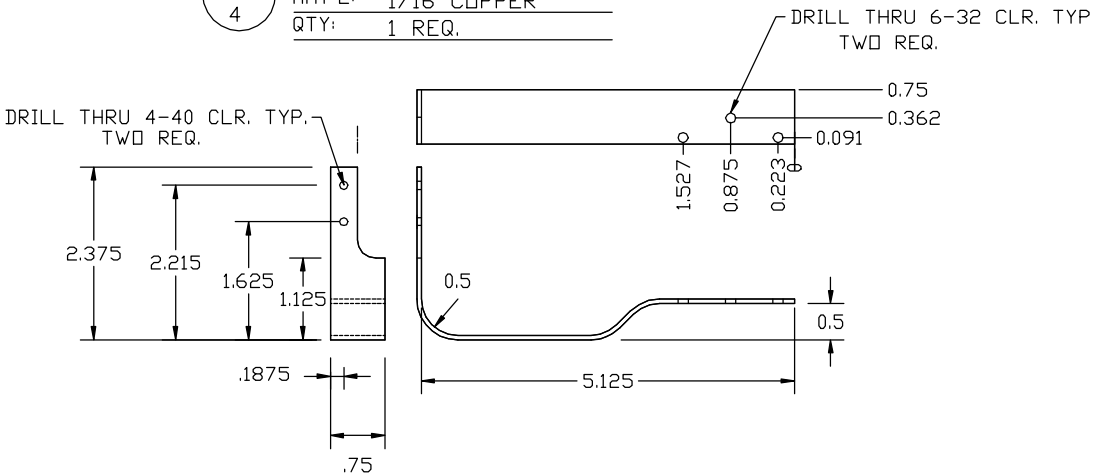

LEUSCHNER OBSERVATORY UNIVERSITY OF CALIFORNIA - BERKELEY			
IR CAMERA			
DEWAR MARK II			
SMALL PARTS			
DWG BY R. TREFFERS	DATE 9/30/2000	SHOWN ON IRCAM025	SCALE : Not To Scale
DESIGN BY		DWG TYPE DETAIL	DWG No IRCAM035 REV