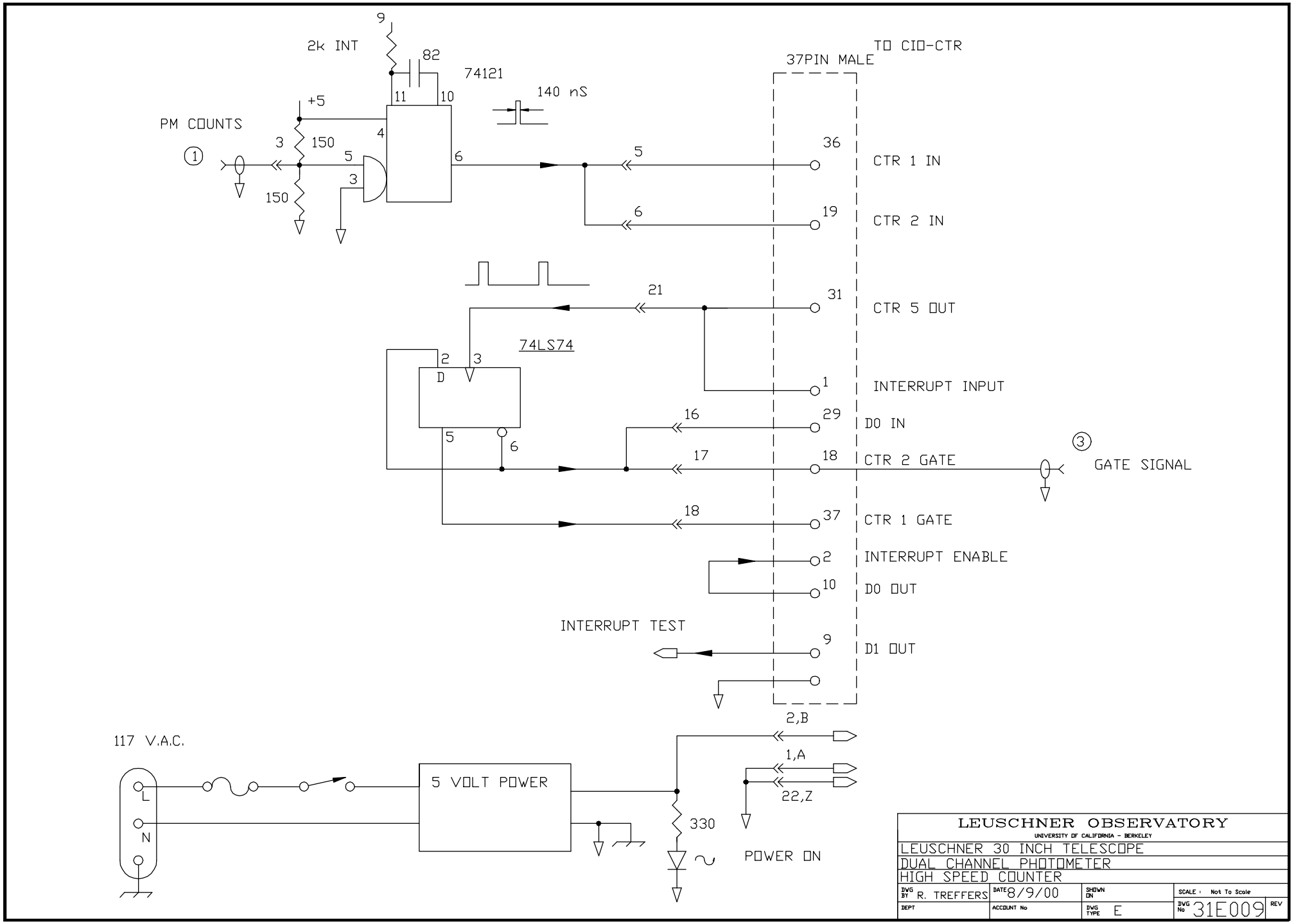
2k INT
82
74121
140 nS
TO CIO-CTR
37PIN MALE
PM COUNTS
+5
150
150
CTR 1 IN
CTR 2 IN
CTR 5 OUT
74LS74
INTERRUPT INPUT
DO IN
CTR 2 GATE
GATE SIGNAL
CTR 1 GATE
INTERRUPT ENABLE
DO OUT
INTERRUPT TEST
D1 OUT
117 V.A.C.
5 VOLT POWER
330
POWER ON
LEUSCHNER OBSERVATORY
UNIVERSITY OF CALIFORNIA - BERKELEY
LEUSCHNER 30 INCH TELESCOPE
DUAL CHANNEL PHOTOMETER
HIGH SPEED COUNTER
DWG BY R. TREFFERS
DATE 8/9/00
SHOWN IN
SCALE : Not To Scale
DEPT
ACCOUNT No
DWG TYPE E
DWG No 31E009
REV